GIMA

PROFESSIONAL MEDICAL PRODUCTS

SGABELLO DA ESTETISTA
BEAUTICIAN STOOL
TABOURET D'ESTHÉTICIENNE
TABURETE PARA ESTÉTICA
BANCO DE ESTETICISTA
KOSMETIKHOCKER

REF **1023AB2 (45240 - 45241 - 45242 - 45243 - 45244 - 45245)**

Importato da / Imported by / Importé par /
Importado por / Importado por / Eingeführt von:
Gima S.p.A.
Via Marconi, 1 - 20060 Gessate (MI) Italy
gima@gimaitaly.com - export@gimaitaly.com
www.gimaitaly.com
Made in China

M45240-M-Rev.1-09.21

1 ABOUT THIS MANUAL

This manual shall only be used for the reference of operation of this particular model. If the manual is used for other purposes, we will not undertake any according consequences and responsibility.

All information of this manual shall be protected by copyright and shall not be copied and translated in any part of this specification without the written consent of manufacturer.

2 WARNING

- Do not stand on the product.
- Do not allow children play with the product.
- Do not place the equipment in damp places such as bathroom, do not expose to direct sunlight.
- Do not use this product in the places where you are painting/spraying paints.

3 PRECAUTIONS

- Operators should use this product in strict accordance with the instructions, and save this manual for future reference.
- Comply with safe operating procedures, do not overload. Make sure the components of the product are in good condition, eliminate the unsaft factors.
- Tighten the casters, backrests, and the seat regularly, to avoid malfunctions caused by loose or falling parts.
- This product must not be used under faults. When abnormal phenomena or abnormal sounds are found, please check about it immediately. Use after problem solved.
- Operator should be familiar with the precautions described in each chapter of the product manual to ensure personal and product safety.
- Please place the equipment on a level ground.
- If the casters are damaged, please replace them before use.
- After each treatment, use a neutral reagent to remove the dust and stains on the leather and wood.
- Put the product to a proper location, according to the overall layout, the daylighting or artificial lightings and operation condition of the working environment. And keep it in the clean, dry and cool environment.

4 ASSEMBLY AND OPERATION

1. Put the product to a proper location, according to the overall layout, the daylighting or artificial lightings and operation condition of the working environment. And keep it in the clean, dry and cool environment.
2. Open the packing carton to check if the bed is intact and whether the accessories or spares are complete. Please contact distributor or us if there's any problem.
3. Installation

This product graphic is only for display, the specific product structure please refer to the actual product.

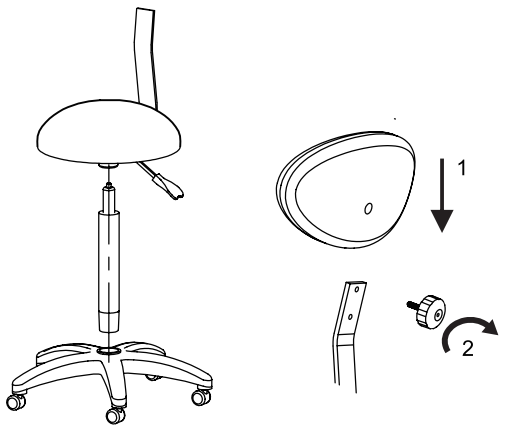

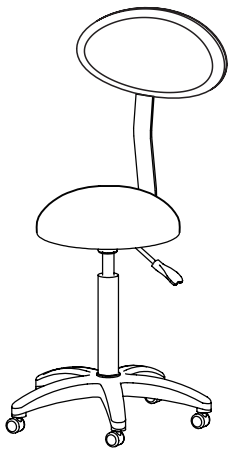

5 TECHNICAL PARAMETERS

The product illustrations in this manual are based on the configuration parameters of standard gas lift. If it is equipped with another optional gas lift, the parameters are subject to the actual product.

Lifting Rated Load	170kg
Package Size	590x280x580
Net Weight	7.5kg
Gross Weight	8,5kg

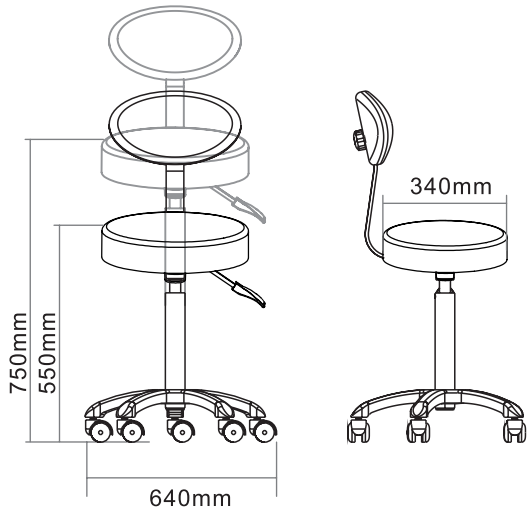

6 MAINTENANCE

If there is grease, please wipe the surface with clean water and neutral reagent, and use a soft cloth to remove dust and stains. It is forbidden to use alcohol, strong acid, strong alkali and other solvents to prevent premature deterioration of plastic parts.

7 TROUBLESHOOTING

NOT WORKING PROPERLY	1 .Can't raise or lower the stool.	1.Replace the gas lift.
	2.Casters cannot rotate or move.	2. Replace the caster.

If problem is still not solved after above operation, please contact maintenance center or supplier to solve it.

GIMA WARRANTY TERMS

The Gima 12-month standard B2B warranty applies.